ems25+

Technical Specification

The ems25+ controller is a small controller to be used where space is a premium. The controller is available with a remote motion sensor to allow flexibility when installing into smaller coolers.

A large fascia kit may used if required for installation into larger coolers previously fitted with em55 series controllers.

USER INTERFACE

Display:	3-digit LED
	0.1°C (1°F) Resolution

BUTTONS

- Teach
- Set
- Up
- Down

LEDs

- Compressor
- Saving temperature disable
- Motion

DIMENSIONAL DRAWINGS

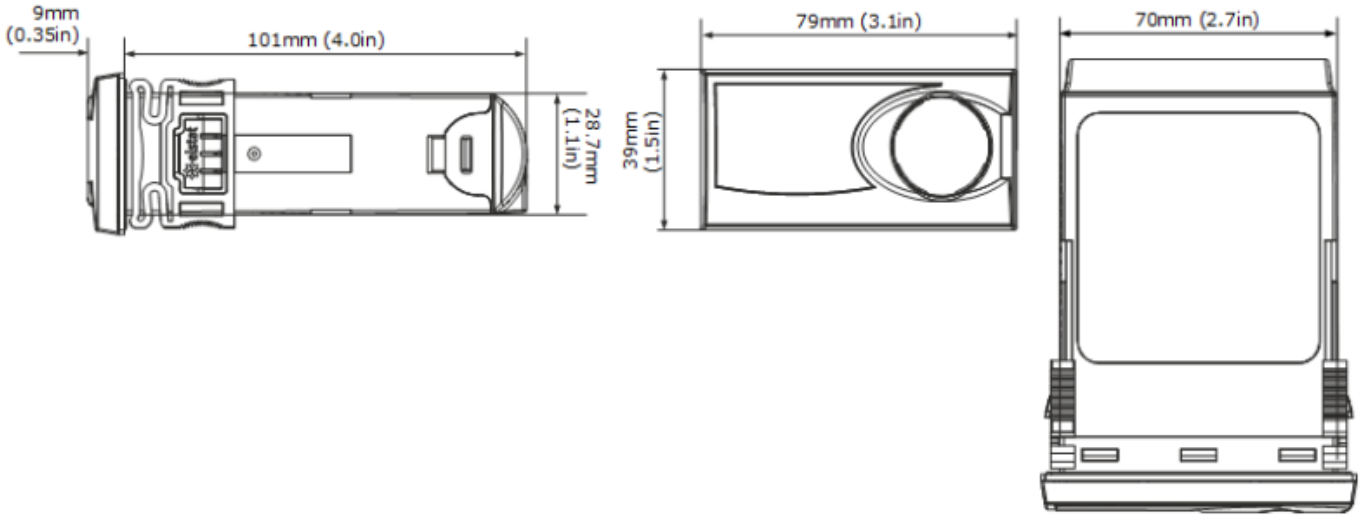

RELAY RATINGS:

RELAY	IEC 60730 rating @ 100-120VAC and 220-240VAC 50-60Hz
COMPRESSOR	6 (6) A, p.f. 0.6
LIGHTS	2 (2) A, p.f. 0.6

TEMPERATURE SENSORS

SENSOR	INPUT	IEC 60730 rating @ 100-120VAC and 220-240VAC 50-60Hz
COMPRESSOR		6 (6) A, p.f. 0.6
LIGHTS		2 (2) A, p.f. 0.6

ENVIRONMENTAL RATINGS:

CHARACTERISTIC	VALUE
IP RATING	
CONTROLLER	IPX5
MAXIMUM AMBIENT TEMPERATURE	50°C (122°F)

PRODUCT APPROVAL

EN603730-1
EN60730-2-9

GB14536.1-2008
GB14536.10-2008

IEC60730-1
IEC60730-2-9
Glow wire: IEC60335-1

UL 60730-1 / CSA E60730-1
UL 60730-2-9 / CSA E60730-2-9

elstat

www.elstat.io

info@nexo.io

ems25+

Technical Specification

ELECTRICAL CONNECTIONS

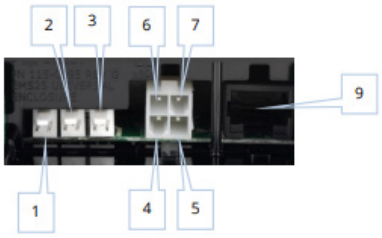

mains cable harness with 4-way connector uses 4, 5, 6 and 7

1. Door switch
2. Condenser sensor
3. Appliance sensor
4. Lights - white cable
5. Neutral - blue cable
6. Compressor - red cable
7. Live - brown cable (supply voltage 120VAC or 240VAC)
8. NOT USED
9. MicroRMD **and** Parameter programming port (**RJ45**)

PARAMETER SET:

CF	Celsius (°C) or Fahrenheit (°F) sets the temperature scale.	Ht	Condenser high temperature is the maximum permitted temperature measured in the refrigeration system. On reaching Ht, the controller disables the compressor and activates and alarm	bO	Buzzer enable is the option to disable a warning buzzer for alarm conditions. Does not affect door alarms.
SPC SPF	Set Point temperature in Fahrenheit (SPF) or Celsius (SPC) sets the lower ready mode temperature (cut out temperature).	rt	Compressor rest time is the minimum time between compressor cycles.	bI	Buzzer duration for open door alarm conditions. After the buzzer duration, the controller switches off the compressor.
dIF	Differential temperature added to SP temperature.	dS	Delay to standby is the delay in switching to saving mode from the operational mode.	Ad	Alarm delay is the maximum time a door can be open before sounding the alarm buzzer.
CAI	Calibration 1 adds an offset to temperatures measured by the appliance sensor.	Ld	Light delay is the delay to switch off the cooler lights after switching to the saving mode.	AF	Activity frequency is the minimum number of door openings or motion counts to indicate an active 30 minute period in the self-learning matrix.
SSP	Saving mode set point sets the lower saving mode temperature (cut out temperature).	Sr	Saving restart is the maximum time allocated to lower the product temperature to the set point temperature from the saving mode.	Sn	Sensor enable enables the motion sensor input.
Sd	Saving differential is the temperature added to SSP that sets the upper saving mode temperature (cut in temperature).	Ct	Refrigeration system failure is the maximum continuous runtime of the compressor without reaching the set point temperature (cut out temperature)	PEr	Saving temperature disable is the option to maintain the ready mode temperature at all times.
IPd	Uninterrupted pull down the compressor runs continually until the set point is reached	dE	Defrost interval is the period between the end of a defrost cycle and beginning of the next defrost cycle.	LP	Learning period defines 1-day or 7-day learning period.
dtt	Freeze-up protection is the temperature to disable the compressor and enable the evaporator fan to prevent freeze up due to low temperature.	dd	Defrost duration is the maximum time of a defrost cycle.	dIS	Display is the option to display the temperature or the word USE.
dtd	Defrost termination temperature defines the temperature to end a defrost cycle.	d2	Display stability sets the rate of change of the displayed temperature	Ar	Marketing mode is the option to keep the lights on at all times.